13”x 70’ & 90’ HP
MECHANICAL DRIVE
SWING AWAY AUGER

PARTS LISTS
SERIAL NOS. 84000 - 87999

70’ TUBE AND UNDERCARRIAGE ASSEMBLY - 13” HP MDSA AUGER
SERIAL NOS. 84000 - 87999

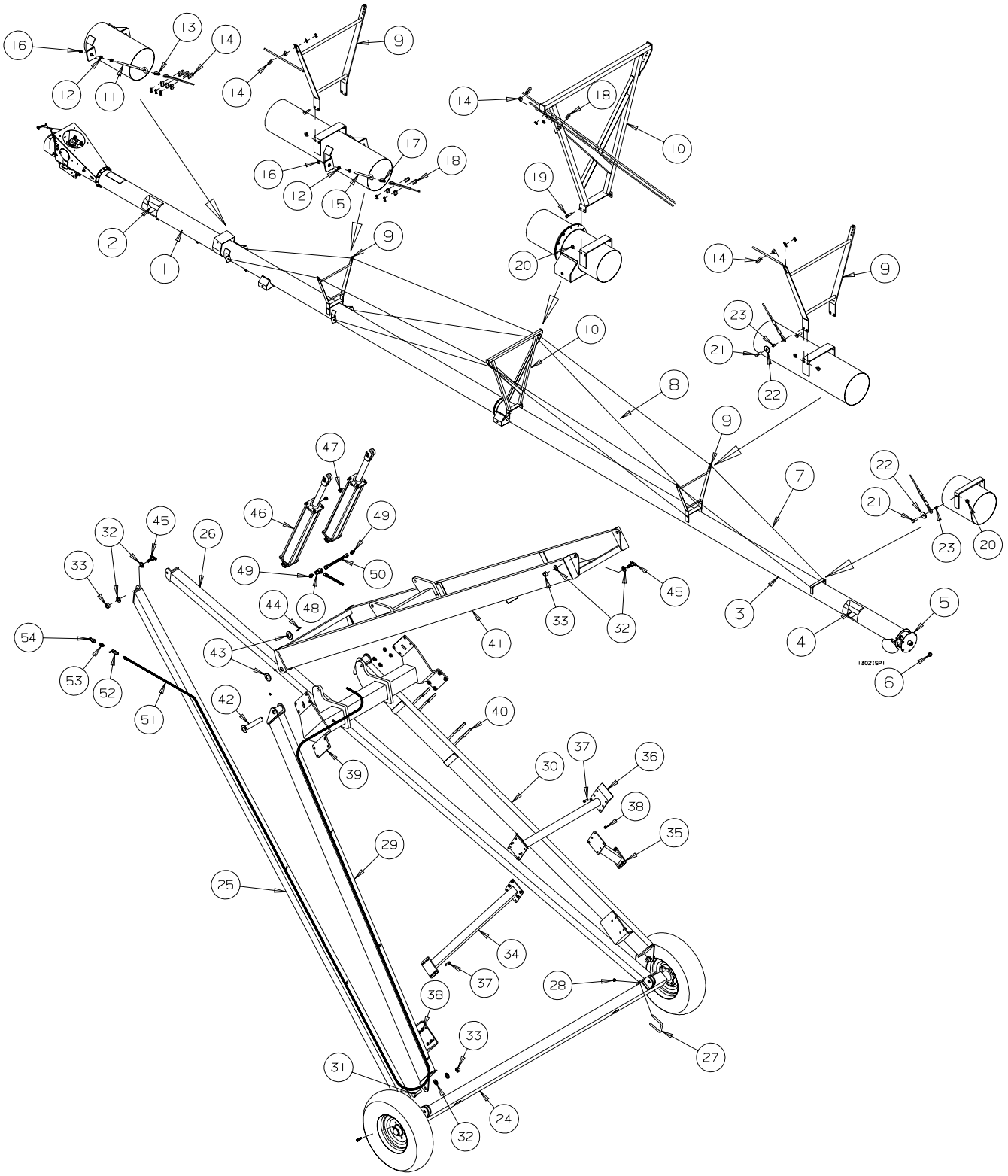

REF #	PART NO.	DESCRIPTION
1	C306059	Lower Tube Weldment
2	C306060	Lower Flight Weldment
3	C306070	Upper Tube Weldment - 70’
4	C306069	Upper Flight Weldment - 70’
5	C306068	Thrust End Plate
6	B011502	Dust Cap - DC15
7	B008310	1/2” dia x 53’ Truss Cable
8	B008308	3/8” dia x 32.5’ Truss Cable
9	C302871	Small Truss Tower
10	C305872	Large Truss Tower
11	B0020247	5/8”x 16” Eyebolt
12	C302919	Eyebolt Bushing
13	B008086	1/2” Cable Thimble
14	B008085	1/2” Cable Clamp
15	B0020246	5/8”x 9 3/8” Eyebolt
16	B001139	5/8” Hex Nut
17	B008081	3/8” Cable Thimble
18	B008080	3/8” Cable Clamp
19	B001086	5/8”x 1 1/4” Bolt
20	B0011415	5/8” Lock Nut
21	B001071	5/8”x 2 1/2” Bolt
22	B0020717	2.5” ODx 5/8” ID Washer
23	B002311	Buttite Spacer - 5/8” ID x 3/4” lg.
24	C302864	Axle Weldment - 70’
25	C302865R	Axle Arm - 70’ - Right
26	C302865L	Axle Arm - 70’ - Left
27	B0020188	5/8”x 4” U-bolt x 5 1/2” lg.
28	B0011415	5/8” Lock Nut
29	C302866R	Lift Arm - 70’ - Right
30	C302866L	Lift Arm - 70’ - Left
31	B0011177	1”x 3” Bolt
32	B001159	1” Flatwasher
33	B001075	1” Lock Nut
34	C200727	Transport Uprite - 70’ - Right
35	C200730	Transport Uprite - 70’ - Left
36	C302918	Transport Rest Cross - 70’
37	B001040	1/2”x 1 1/4” Bolt
38	B001136	1/2” Lock Nut
39	C302863	Lift Cross - 70’
40	B0020213	5/8”x 8” U-bolt x 4 1/2” lg.
41	C302867	Ladder - 70’
42	C302931	1 1/2” dia. Hinge Pin
43	B001161	1 1/2” Flatwasher
44	B0020605	5/16”x 3” Roll Pin
45	C200666	1”x 2 1/2” Suspension Bolt
46	B0191677	4”x 36” Hydraulic Cylinder
47	B0193051	#6 MORB Breather, 10 micron
48	B019463	Tee - #6 FJIC x #6 MJIC x #6 MJIC
49	B019416	#6 MORB x #6 MJIC - 1/16” dia Restrictor
50	B019249	3/8” Hydraulic Hose x 18” - #6 FJIC both ends
51	B019292	3/8” Hydraulic Hose x 56’ - 3/8” MPT x #6 FJIC
52	B019300	3/8” FPT Hydraulic Ball Valve
53	B019516	1/2” MPT x 3/8” MPT Reducer Nipple
54	B019200	Pioneer Male Tip - 1/2” MPT

90’ TUBE AND UNDERCARRIAGE ASSEMBLY - 13” HP MDSA AUGER
SERIAL NOS. 84000 - 87999

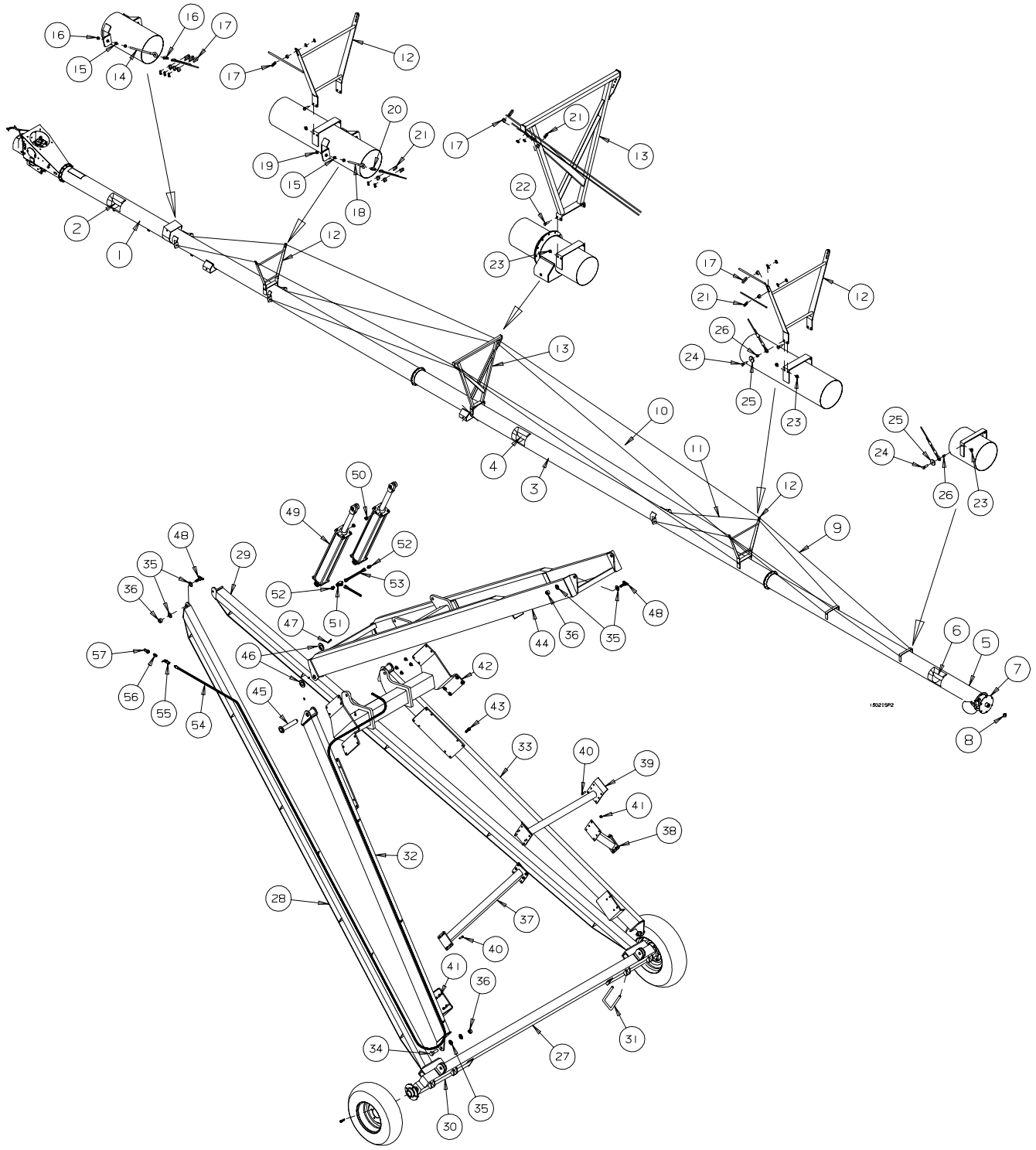

REF #	PART NO.	DESCRIPTION
1	C306059	Lower Tube Weldment
2	C306060	Lower Flight Weldment
3	C302857	Centre Tube Weldment
4	C303612	Centre Flight Weldment
5	C306071	Upper Tube Weldment - 90’
6	C306072	Upper Flight Weldment - 90’
7	C306068	Thrust End Plate
8	B011502	Dust Cap - DC15
9	B008309	1/2” dia x 73’ Truss Cable
10	B0083105	1/2” dia x 47’ Truss Cable
11	B008312	3/8” dia x 19.5’ Truss Cable
12	C302871	Small Truss Tower
13	C305872	Large Truss Tower
14	B0020247	5/8”x 16” Eyebolt
15	C302919	Eyebolt Bushing
16	B008086	1/2” Cable Thimble
17	B008085	1/2” Cable Clamp
18	B0020246	5/8”x 9 3/8” Eyebolt
19	B001139	5/8” Hex Nut
20	B008081	3/8” Cable Thimble
21	B008080	3/8” Cable Clamp
22	B001086	5/8”x 1 1/4” Bolt
23	B0011415	5/8” Lock Nut
24	B001071	5/8”x 2 1/2” Bolt
25	B0020717	2.5” ODx 5/8” ID Washer
26	B002311	Buttite Spacer - 5/8” ID x 3/4” lg.
27	C302876	Axle Weldment - 90’
28	C302869R	Axle Arm - 90’ - Right
29	C302869L	Axle Arm - 90’ - Left
30	C302877	Axle Extension - 90’
31	B0020211	5/8”x 5” U-bolt x 6 1/2” lg.
32	C302870R	Lift Arm - 90’ - Right
33	C302870L	Lift Arm - 90’ - Left
34	B0011177	1”x 3” Bolt
35	B001159	1” Flatwasher
36	B001075	1” Lock Nut
37	C302878R	Transport Uprite - 90’ - Right
38	C302878L	Transport Uprite - 90’ - Left
39	C302879	Tranport Rest Cross - 90’
40	B001040	1/2”x 1 1/4” Bolt
41	B001136	1/2” Lock Nut
42	C302880	Lift Cross - 90’
43	B001070	5/8”x 2” Bolt
44	C302868	Ladder - 90’
45	C302931	1 1/2” dia. Hinge Pin
46	B001161	1 1/2” Flatwasher
47	B0020605	5/16”x 3” Roll Pin
48	C200666	1”x 2 1/2” Suspension Bolt
49	B0191895	5”x 36” Hydraulic Cylinder
50	B0193051	#6 MORB Breather, 10 micron
51	B019463	Tee - #6 FJIC x #6 MJIC x #6 MJIC
52	B019441	#6 MORB x #6 MJIC Adapter Nipple
53	B019249	3/8” Hydraulic Hose x 18” - #6 FJIC both ends
54	B019293	3/8” Hydraulic Hose x 66’ - 3/8” MPT x #6 FJIC
55	B019300	3/8” FPT Hydraulic Ball Valve
56	B019516	1/2” MPT x 3/8” MPT Reducer Nipple
57	B019200	Pioneer Male Tip - 1/2” MPT

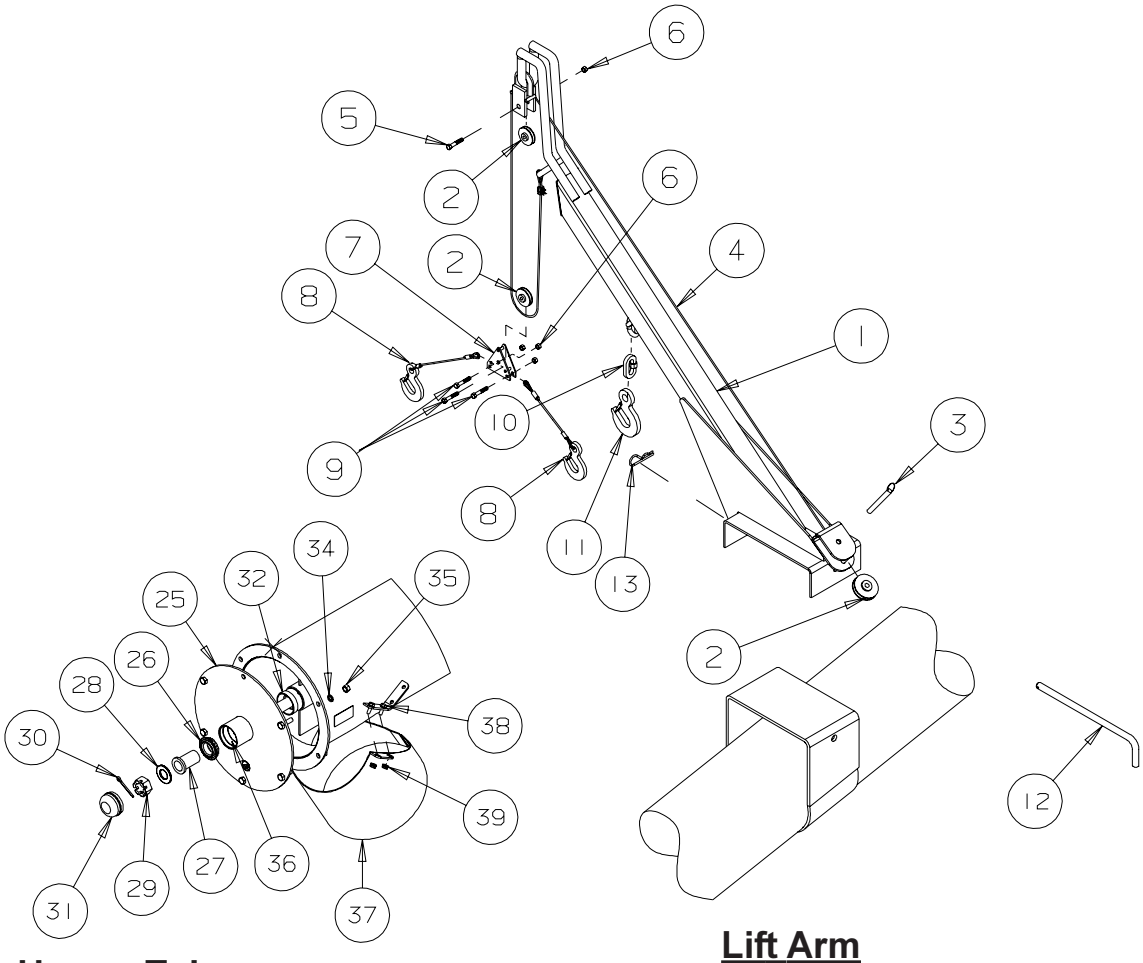

Lift Arm

Upper Tube
Head End Assembly

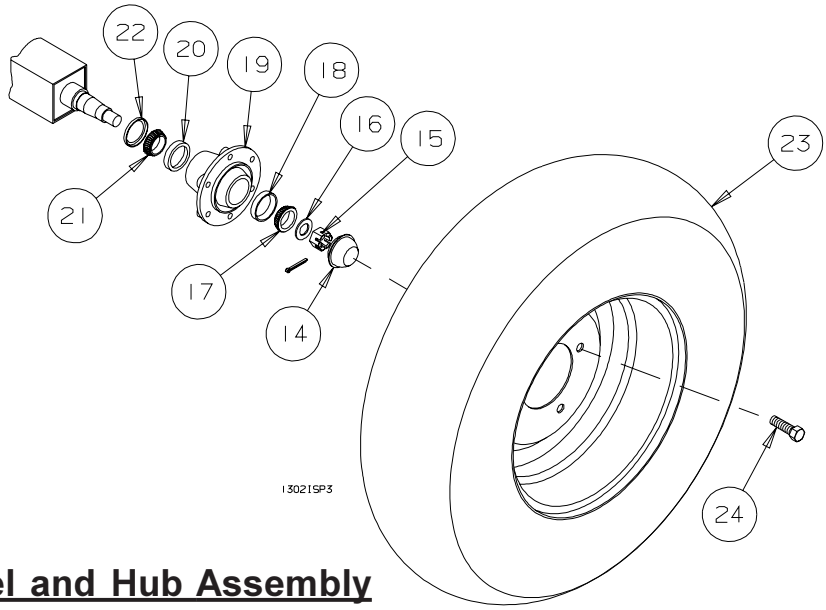

Wheel and Hub Assembly

REF #	PART NO.	DESCRIPTION
1	C304666	Hopper Lift Arm
2	B394712	3” OD Cable Sheave - 1/4” Cable
3	B002106	1/2”x 2” Quick Pin
4	B397710	1/4” cable x 53’
5	B001046	1/2”x 2 1/2” Bolt
6	B001136	1/2” Lock Nut
7	B397730	Triangle Pulley Bracket
8	B008307	1/4” Cable c/w Hook
9	B001044	1/2”x 2” Bolt
10	B021036	1/2” Rapid Chain Link
11	B002125	Steel Chain Hook - 3/4 Ton
12	B399757	Lift Arm Pin
13	B002091	3/16”x 3 3/4” Hair Pin Clip
14	B011503	Dust Cap - 6 Bolt Hub
15	B011681	1” Castle Nut
16	B001158	1” SAE Flatwasher
17	B011603	Outer Cone - 6 Bolt Hub - LM67048
18	B011602	Outer Cup - 6 Bolt Hub - LM67010
19	B011003	6 Bolt Hub c/w Bearings
20	B011652	Inner Cup - 6 Bolt Hub - LM29710
21	B011651	Inner Cone - 6 Bolt Hub - LM29749
22	B011650	Grease Seal - 6 Bolt Hub - 17617
23	B011221	P255R70 - 16 Tire and Rim - 70’
23	B011219	ST235/85R16 Tire and Rim - 90’
NS	B011218	ST235/85R16 Tire only
24	B011504	Wheel Bolt
25	C306068	Thrust End Plate
26	B011651	Tapered Roller Bearing - LM 29749
27	B011710	Tapered Bearing Bushing
28	B001180	1 1/8” SAE Flatwasher
29	B011629	Spindle Nut - 1 1/4”- 12 UNF
30	B002054	3/16”x 2” Cotter Pin
31	B011502	Dust Cap - DC15
32	B011649	Grease Seal - SE11
33	B001041	1/2”x 1 1/4” Bolt
34	B001167	1/2” Lockwasher
35	B001135	1/2” Hex Nut
36	B011652	Bearing Race - LM 29710
37	C307090	13” Down Spout
38	B001433	3/8”x 1” Serrated Flange Bolt
39	B0011326	3/8” Locking Flange Nut

INTAKE BOOT ASSEMBLY - 13” HP MDSA AUGER
SERIAL NOS. 84000 - 87999

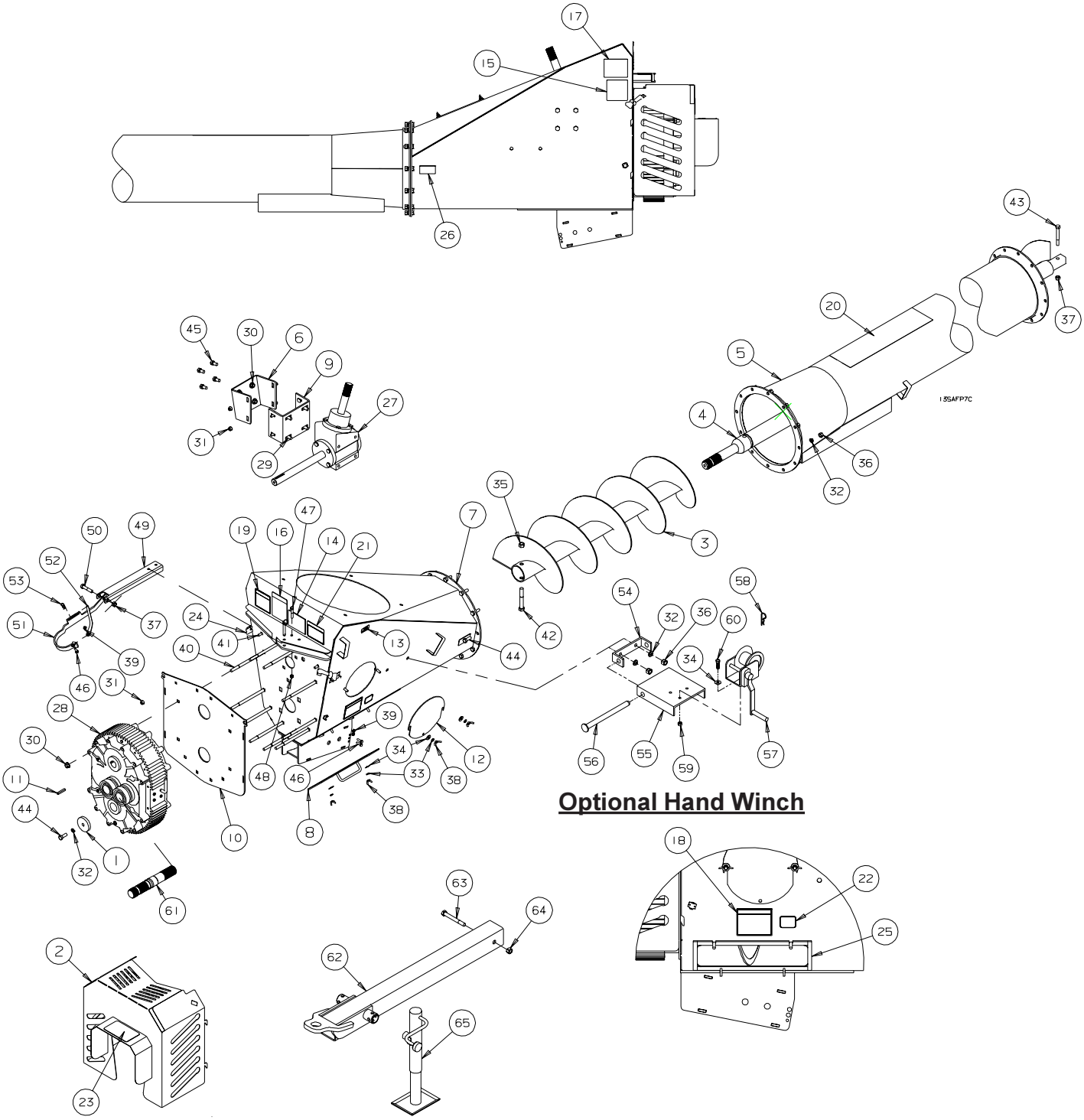

REF #	PART NO.	DESCRIPTION
1	C306081	Retaining Washer
2	C306074	Gearbox Front Guard
3	C306061	13” Booster Flight
4	C306060	Lower Flight - 70’ & 90’
5	C306059	Lower Tube - 70’ & 90’
6	C306057	Outer Gearbox Mount
7	C306056	HP Boot Weld
8	C306055	Boot Cleanout Door
9	C306051	Inner Gearbox Mount
10	C305016	Boot Face Plate
11	C202407	5/16”x 2” Key
12	B198362	Boot Access Cover
13	B029455	Auger Patent Decal
14	B029410	Swing Auger Decal
15	B029350	Hydraulic Oil Decal
16	B029340	Remove PTO Decal
17	B029330	Needle Valve Decal
18	B029310	Cleanout Covers Decal
19	B029111	Moving Part Hazard Decal
20	B029100	Combo. Danger Decal
21	B029091	Cuation Hot Surface Decal
22	B029075	13” HP Shear Bolt Decal
23	B0290615	13” HP Hitch/PTO Decal
24	B0219992	Rubber Latch
25	B021994	1/8”x 3/4” Foam
26	B0210275	Amber Reflect. Tape
27	B0030235	13” Lower Gearbox
28	B003008	Helical Gearbox
29	B001453	1/2”x 1” SF Bolt
30	B001409	1/2” SF Nut
31	B001405	3/8” SF Nut
32	B001167	1/2” Lock Washer
33	B001165	3/8” Lock Washer
34	B001149	3/8” Flat Washer
35	B0011415	5/8” Lock Nut
36	B001135	1/2” Nut
37	B001134	1/2” Stover Lock Nut
38	B0011327	3/8” Wing Nut
39	B0011275	5/16” Stover Lock Nut
40	B0010934	1/2”x 9” Carriage Bolt
41	B001082	3/8”x 1” Carriage Bolt
42	B0010741	5/8”x 4 1/2” Bolt- Gr.8
43	B0010575	1/2”x 4” Bolt - Gr.8
44	B001040	1/2”x 1 1/4” Bolt
45	B001039	1/2”x 1” Bolt
46	B001010	5/16”x 1” Bolt
47	B001030	3/8”x 2 1/4” Bolt
48	B0011325	3/8” Stover Lock Nut
49	C306075	PTO Channel Support
50	B001048	1/2”x 3” Bolt
51	C306076	13” PTO Holder
52	C305026	PTO Clasp
53	B002094	1/8”x 1 9/16” Hair Pin
54	B194181	Boot/Winch Mount Plate
55	B194182	Winch Mount Plate
56	B394682	Winch Mount Pin
57	B030200	S-1500 Brake Winch
58	B002091	3/16”x 3 3/4” Hair Pin
59	B0011325	3/8” Lock Nut
60	B001025	3/8”x 1 1/4” Bolt
61	B0030081	Gearbox Drive Shaft
62	C306053	13” Hitch
63	B0011105	3/4” x 5 1/2” Bolt
64	B001143	3/4” Lock Nut
65	B030500	2000 lb Side Wind Jack

SWING HOPPER ASSEMBLY - 13” HP MDSA AUGER
SERIAL NOS. 84000 - 87999

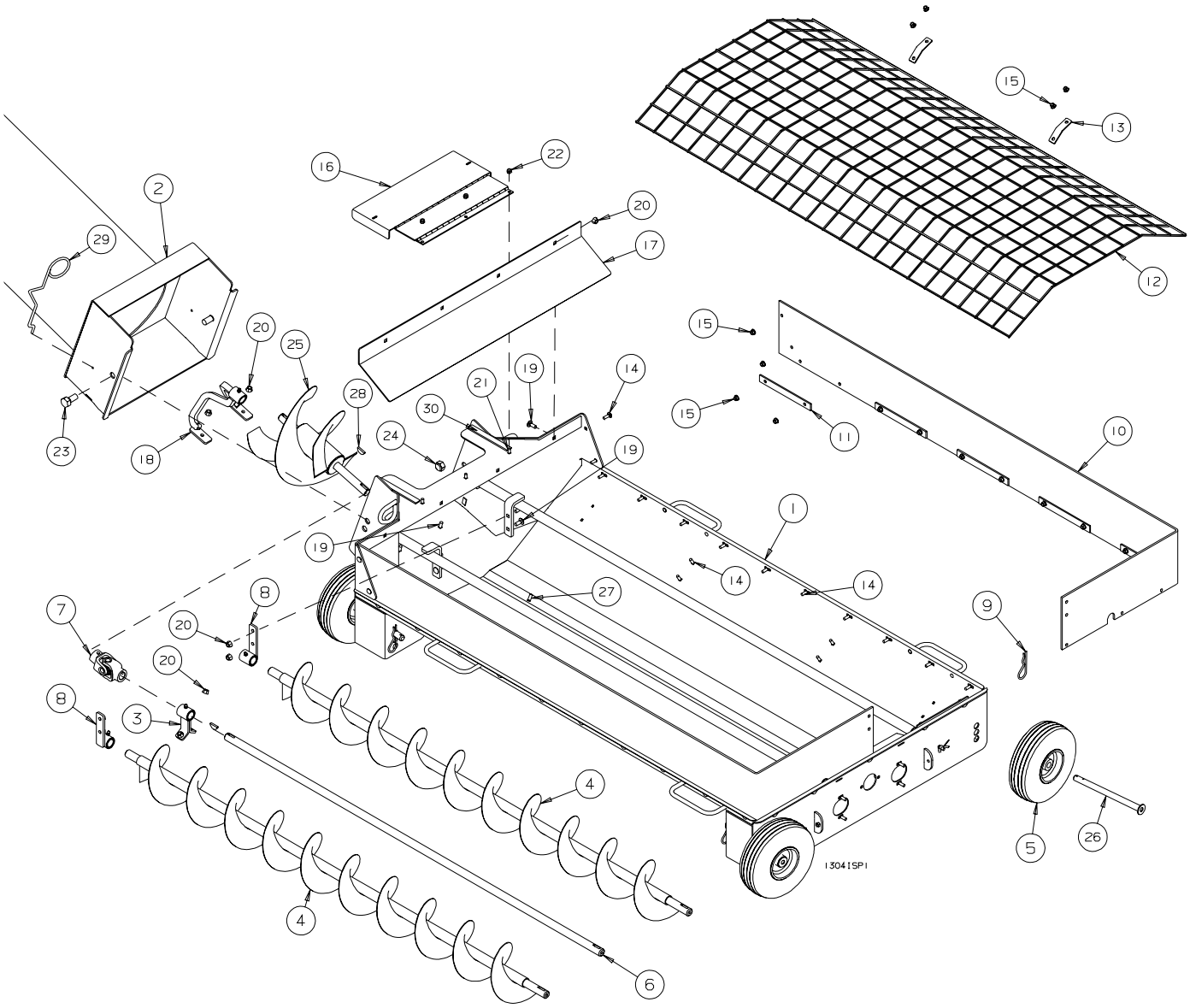

REF #	PART NO.	DESCRIPTION
1	C306008	Swing Hopper Weldment
2	C305033	13” HP Swing Tube
3	C104004	Hopper Driveshaft Bearing
4	C104009H	Right Hopper Flight - Heavy
5	B011046	10” Dia Hopper Solid Tire & Rim - 3/4” Bore
6	C306005	13” Hopper Driveshaft
7	B0321125	1” x 1” U-Joint - 6R
8	C104005	Flight Hanger
9	B002091	.177” x 3 3/4” Hair Pin Clip
10	B0210418	Rubber Hopper Extension
11	B198071	Aluminum Hold Down Strap
12	C104010	Hopper Safety Grate
13	B198358	Hopper Mesh Retainer
14	B0010811	5/16” x 1” Carriage Bolt
15	B0011276	5/16” Flange Lock Nut
16	C104013	Transition Cover
17	C306011	Baffle Plate
18	C306004	13” Transition Flight Mount
19	B001082	3/8” x 1” Carriager Bolt
20	B001405	3/8” Serrated Flange Nut
21	B001081	5/16” x 3/4” Carriage Bolt
22	B001127	5/16” Lock Nut
23	B0010988	3/4” x 1 1/4” Bolt
24	B001143	3/4” Lock Nut
25	C306006	13” Transition Flight
26	B198856	Hopper Wheel Pin
27	B001433	3/8” x 1” Serrated Flange Bolt
28	B009700	1.25” x .25” Woodruff Key - #810
29	B021086	Cover Hold Down Spring
30	C104022	Hopper Foam Seal

SWING HOPPER DRIVE ASSEMBLY - 13” HP MDSA AUGER
SERIAL NOS. 84000 - 87999

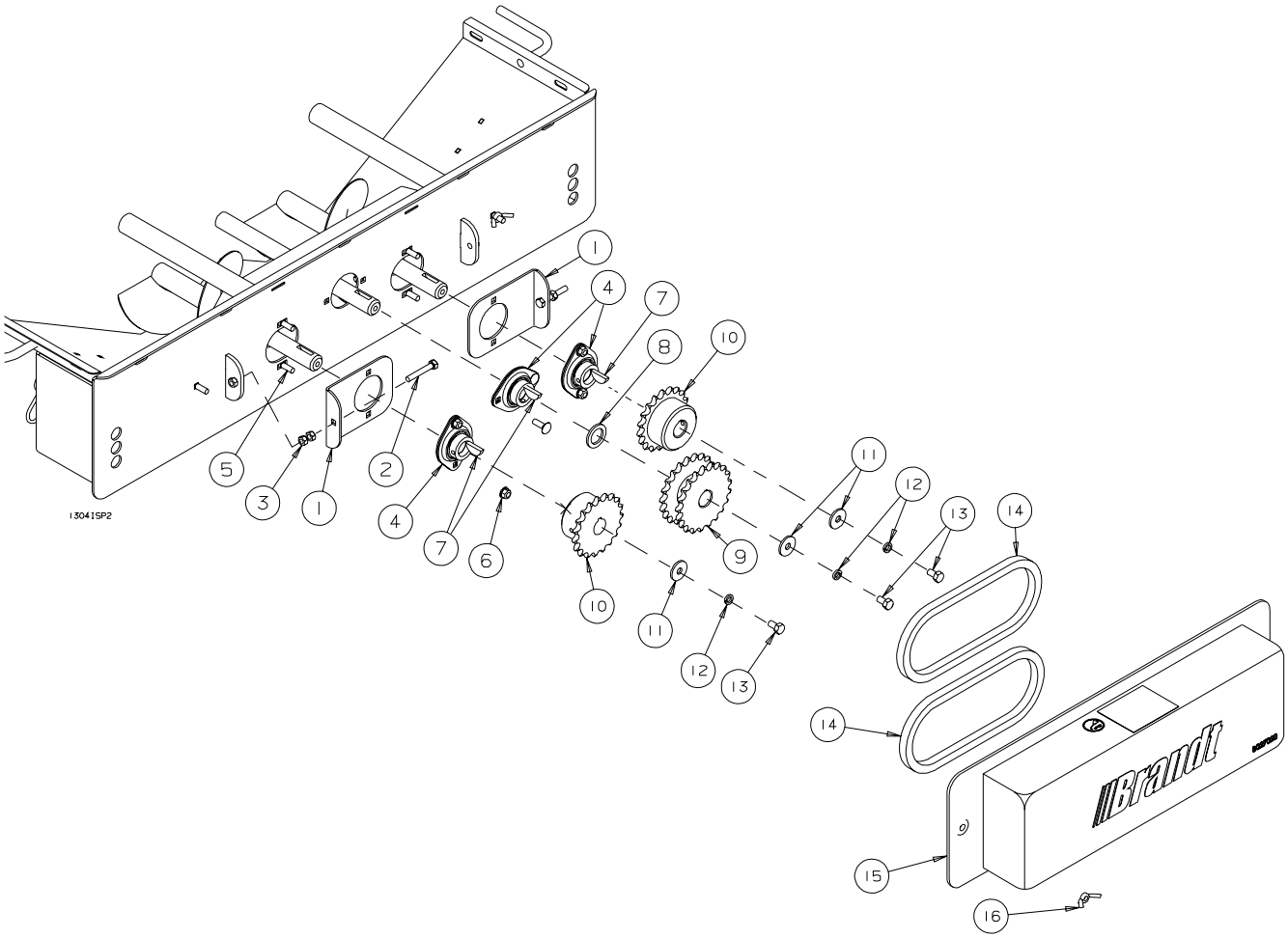

REF #	PART NO.	DESCRIPTION
1	C104017	Chain Tension Plate
2	B0010213	5/16” x 2” Full Thread Bolt
3	B001126	5/16” Nut
4	B017111	1” - 2 Bolt Flangette Bearing
5	B0010811	5/16” x 1” Carriage Bolt
6	B0011276	5/16” Locking Flange Nut
7	B009700	1.25” x .25” Woodruff Key - #810
8	B002073	1 1/2” OD x 1” ID x 10 Ga Machinery Bushing
9	B0090021	50-21 Double Sprocket - 1” Bore
10	B0094127	50-15 Sprocket - 1” Bore - Extended Hub
11	B0020718	1 1/4” OD x 3/8” ID Washer
12	B001165	3/8” Lockwasher
13	B0010225	3/8” x 5/8” Bolt
14	B0090052	R50 x 33 Pitch Roller Chain c/w Offset & Connector Link
15	C104021	Hopper Chain Guard
16	B001129	5/16” Wing Nut

SWING TUBE ASSEMBLY - 13” HP MDSA AUGER
SERIAL NOS. 84000 - 87999

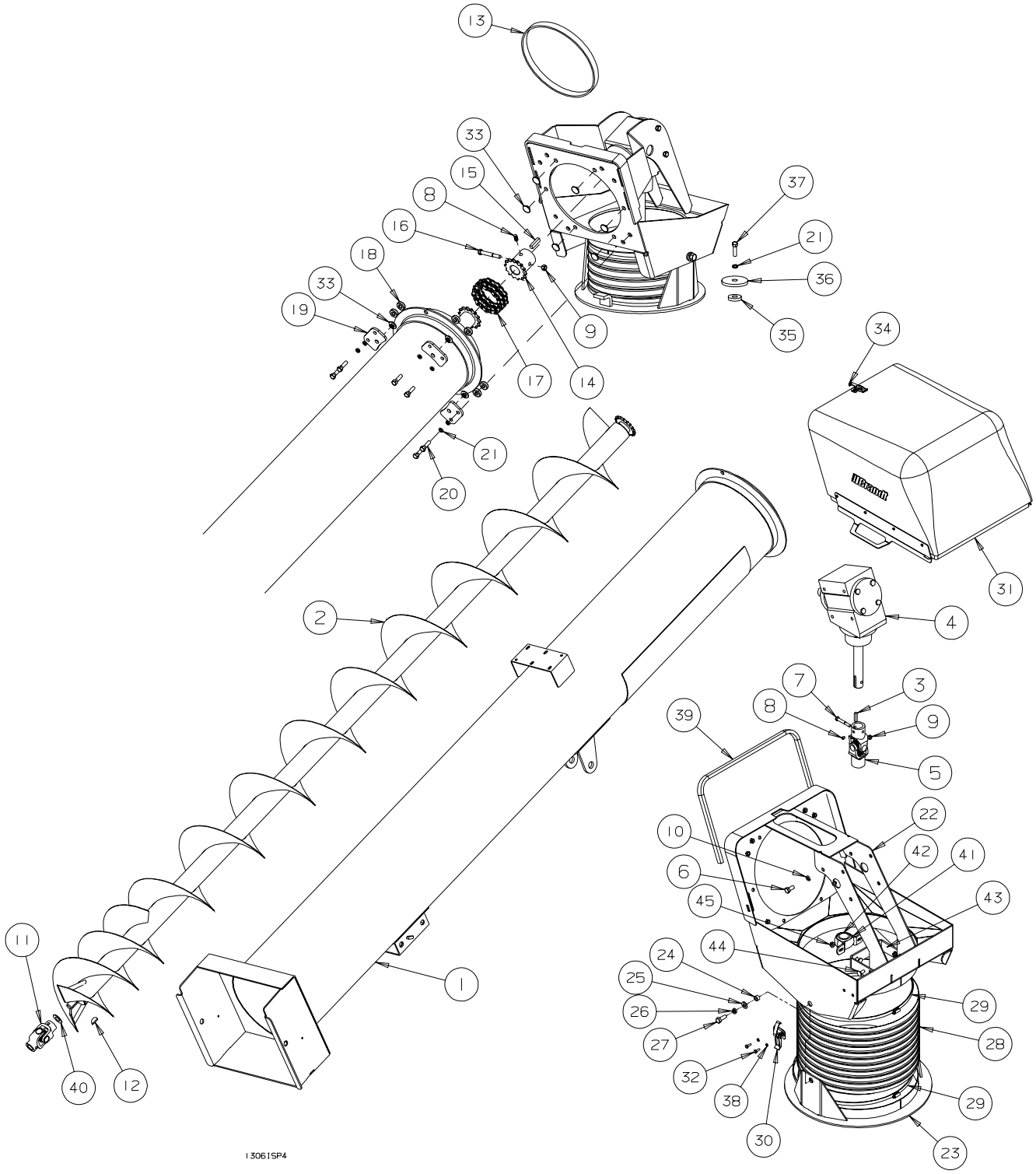

REF #	PART NO.	DESCRIPTION
1	C308033	Swing Tube
2	C305034	Swing Tube Flight
3	B194012	5/16" x 1 1/2" Key
4	B0030245	Gearbox 1:1 - Upper
5	B032137	U-Joint - 1 3/8” x 21 Spline
6	B001039	1/2" x 1" Bolt
7	B001032	3/8" x 2 1/2" Hex Bolt - GR 5
8	B002041	3/8” x 3/8” Set Screw
9	B0011325	3/8" Lock Nut
10	B001167	1/2" Lock Washer
11	B0321125	1” x 1” U-Joint - 6R
12	B009700	1.25” x .25” Woodruff Key - #810
13	13684	Spout Tube Seal
14	B0090026	#50 - 18 Sprocket - 1 3/8” Bore
15	B496680	5/16” x 1 1/2” Key
16	B001037	3/8” x 3” Bolt - Gr.8
17	B009593	50-2 Chain - 18 Pitch
18	B027499	Plastic Spacer Bushing - 1” OD x 5/16” thick
19	C100870	Retainer Plate
20	B001025	3/8” x 1 1/4” Bolt
21	B001165	3/8” Lockwasher
22	C306028	Upper Spout Swivel
23	C306067	Lower Spout Swivel
24	C306042	Swivel Bushing
25	B001152	1/2” SAE Flatwasher
26	B001167	1/2” Lock washer
27	B001041	1/2” x 1 1/2” Bolt
28	C305019	18” Downspout Hose x 12”
29	B024211	10” Hose Clamp
29	B024085	7” Hose Clamp
30	B021100	Large Latch Assembly
31	C306029	Plastic Spout Cover Assembly
32	B001002	1/4” x 3/4” Bolt
33	B027500	Plastic Wear Bushing
34	B021110	Small Latch Assembly
35	B027498	Small Swing Tube Spacer - 1.1” OD x 3/8” thick
36	B198361	Large Swing Tube Retainer
37	B001031	3/8”x 1 1/2” Bolt
38	B001163	1/4” Lock Washer
39	13696	Spout Cover Seal
40	B001159	1” Flatwasher
41	B017040	Bearing Housing
42	B017044	1 3/8” ID Wood Bearing
43	C306064	Spout Steady Bearing Mount
44	B001082	3/8”x 1” Carriage Bolt
45	B001405	3/8” Serrated Flange Nut

WEASLER SERIES 35E - 50 CV - 1 3/8” 21 SPLINE B003072
13”x 70’ HP MDSA AUGERS SERIAL NO. 84000 - 87999

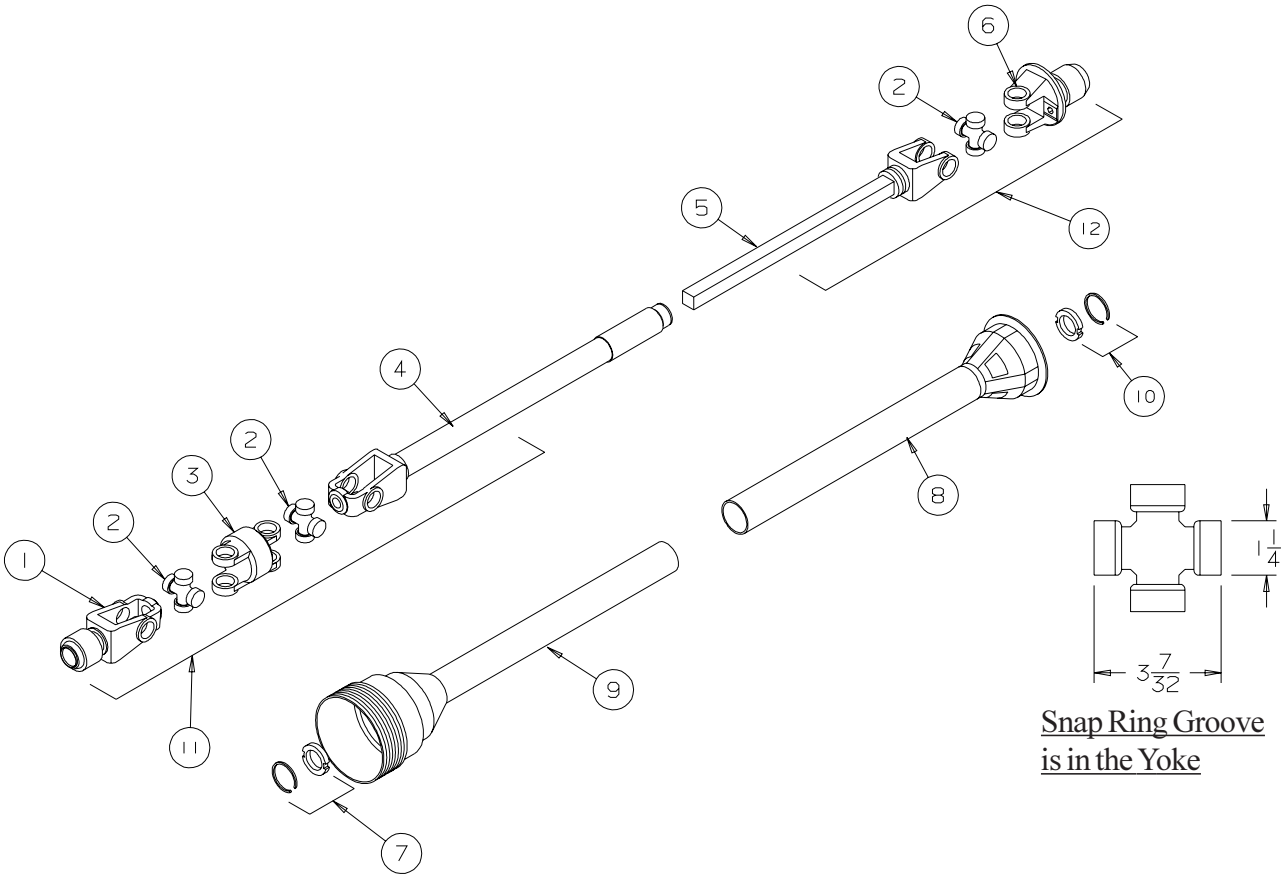

REF #	PART NO.	DESCRIPTION	QTY.
1	B003940	Implement Yoke - 1 3/4” 20 Spline	1
2	B0037151	Cross & Bearing Kit	3
3	B003741	Centre Housing	1
4	B003943	Output Yoke & Tube - CV End	1
5	B003942	Input Yoke & Shaft - Tractor End	1
6	B003865	Shear Yoke Assembly - 1 3/8” 21 Spline	1
7	B003896	Shield Bearing - CV End	1
8	B003946	Outer Shield	1
9	B003947	Inner Shield	1
10	B003906	Shield Bearing - Tractor End	1
11	B003948	Implement Half of Shaft c/w Guard - 20 Spline	1
12	B003949	Tractor Half of Shaft c/w Guard - 21 Spline	1
NS	B003102	Shear Bolt - 5/16” x 1” Gr.5	2
NS	B003103	Shear Nut - 5/16” Stover Lock Nut	2

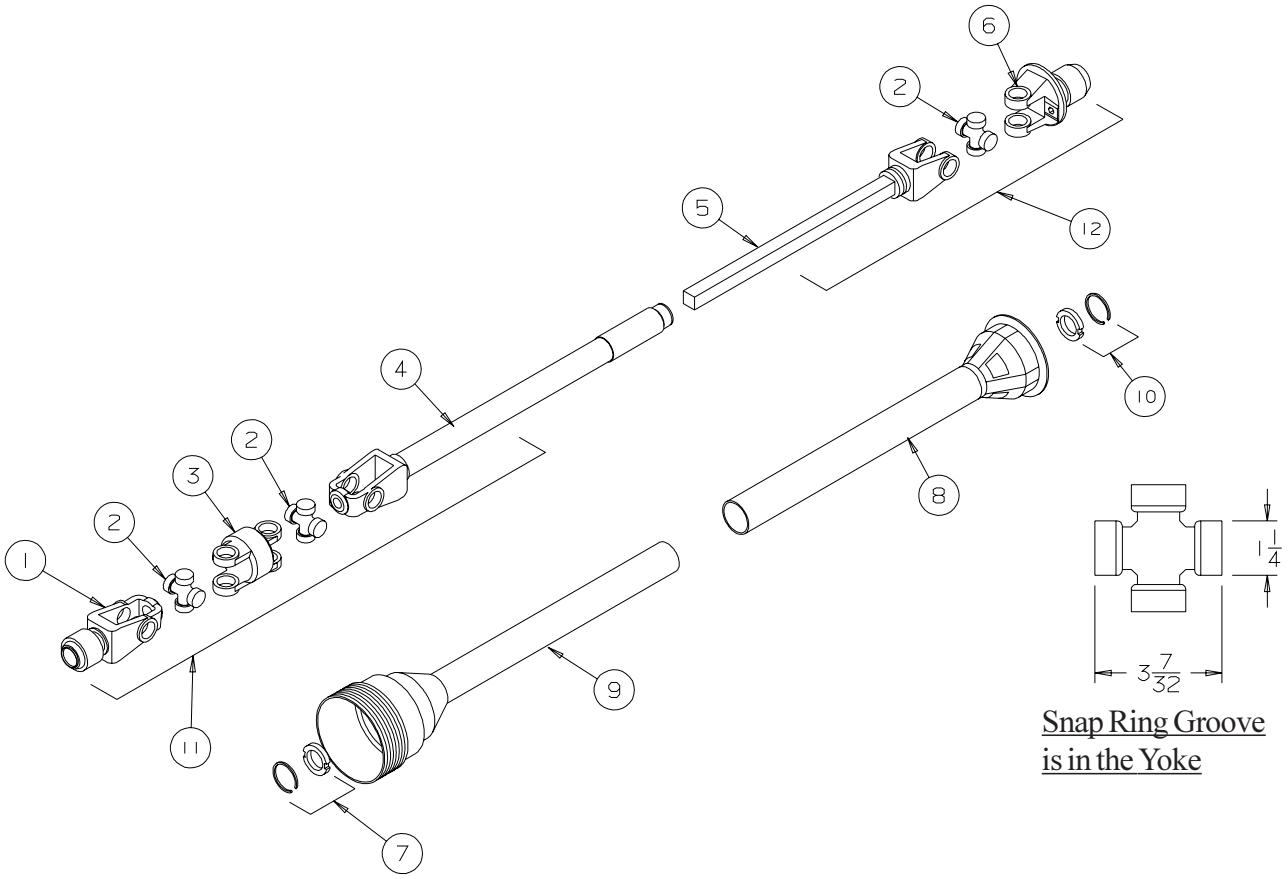

REF #	PART NO.	DESCRIPTION	QTY.
1	B003940	Implement Yoke - 1 3/4” 20 Spline	1
2	B0037151	Cross & Bearing Kit	3
3	B003741	Centre Housing	1
4	B003953	Output Yoke & Tube - CV End	1
5	B003952	Input Yoke & Shaft - Tractor End	1
6	B003954	Shear Yoke Assembly - 1 3/4” 20 Spline	1
7	B003896	Shield Bearing - CV End	1
8	B003956	Outer Shield	1
9	B003957	Inner Shield	1
10	B003906	Shield Bearing - Tractor End	1
11	B003958	Implement Half of Shaft c/w Guard - 1 3/4” 20 Spline	1
12	B003959	Tractor Half of Shaft c/w Guard - 1 3/4” 20 Spline	1
NS	B003102	Shear Bolt - 5/16” x 1” Gr.5	2
NS	B003103	Shear Nut - 5/16” Stover Lock Nut	2

WEASLER SERIES 44E - 50 CV - 1 3/8” 21 SPLINE B003073
13”x 90’ HP MDSA AUGERS SERIAL NO. 84000 - 87999

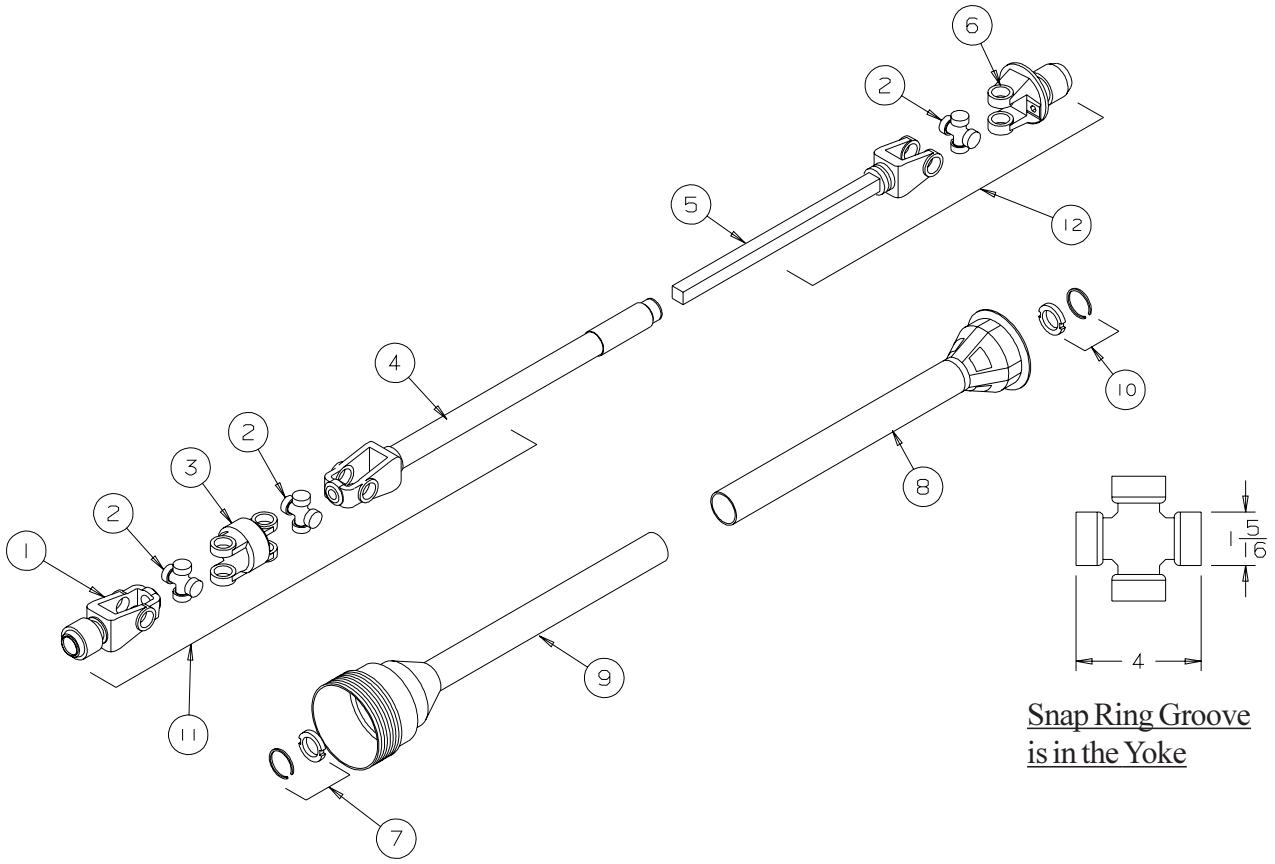

REF #	PART NO.	DESCRIPTION	QTY.
1	B003960	Implement Yoke - 1 3/4” 20 Spline	1
2	B0037161	Cross & Bearing Kit	3
3	B003821	Centre Housing	1
4	B003963	Output Yoke & Tube - CV End	1
5	B003962	Input Yoke & Shaft - Tractor End	1
6	B003964	Shear Yoke Assembly - 1 3/8” 21 Spline	1
7	B003935	Shield Bearing - CV End	1
8	B003966	Outer Shield	1
9	B003967	Inner Shield	1
10	B003965	Shield Bearing - Tractor End	1
11	B003968	Implement Half of Shaft c/w Guard - 1 3/4” 20 Spline	1
12	B003969	Tractor Half of Shaft c/w Guard - 1 3/8” 21 Spline	1
NS	B003102	Shear Bolt - 5/16” x 1” Gr.5	2
NS	B003103	Shear Nut - 5/16” Stover Lock Nut	2

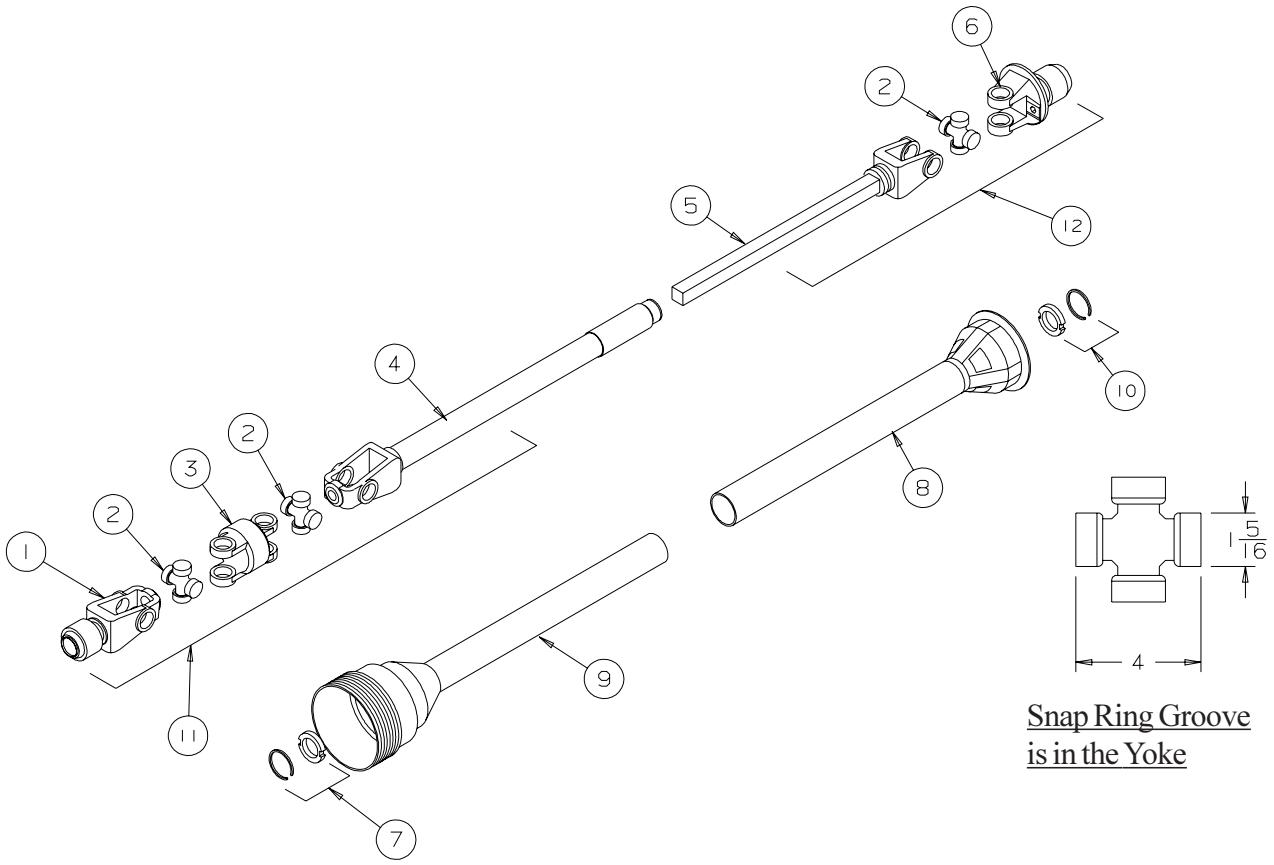

REF #	PART NO.	DESCRIPTION	QTY.
1	B003960	Implement Yoke - 1 3/4” 20 Spline	1
2	B0037161	Cross & Bearing Kit	3
3	B003821	Centre Housing	1
4	B003973	Output Yoke & Tube - CV End	1
5	B003972	Input Yoke & Shaft - Tractor End	1
6	B003974	Shear Yoke Assembly - 1 3/4” 20 Spline	1
7	B003935	Shield Bearing - CV End	1
8	B003976	Outer Shield	1
9	B003977	Inner Shield	1
10	B003965	Shield Bearing - Tractor End	1
11	B003978	Implement Half of Shaft c/w Guard - 1 3/4” 20 Spline	1
12	B003979	Tractor Half of Shaft c/w Guard - 1 3/4” 20 Spline	1
NS	B003102	Shear Bolt - 5/16” x 1” Gr.5	2
NS	B003103	Shear Nut - 5/16” Stover Lock Nut	2

UPPER GEARBOX - B0030245

13” HP MDSA AUGERS SERIAL NO. 84000 - 87999

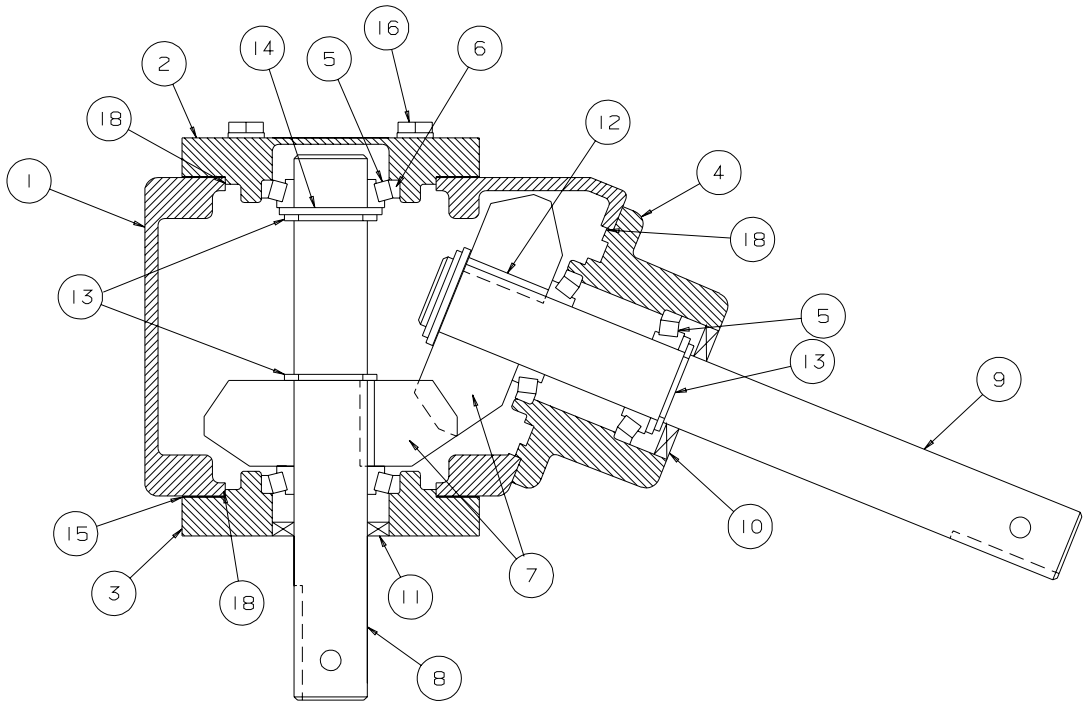

REF #	PART #	DESCRIPTION
1	B003023501	Case
2	B003023502	End Cap - no hole
3	B003023503	End Cap c/w hole
4	B003024504	Quill Housing
5	B003023505	Bearing Cone LM48548
6	B003023506	Bearing Cup LM48510
7	B003023507	Gear - 17 tooth
8	B003024508	Output Shaft
9	B003024509	Input Shaft
10	B003023510	Shaft Seal
11	B003023511	Shaft Seal
12	B003023512	Key - 5/16” x 1.61”
13	B003023513	Snap Ring
14	B003023514	Spacer
15	B003023515	Gasket
16	B003023516	Cap Screw - 3/8”x 1”
17	B003023517	9/16” Pipe Plug c/w O-Ring (not shown)
18	B003023518	O-Ring

LOWER GEARBOX - B0030235

13” HP MDSA AUGERS SERIAL NO. 84000 - 87999

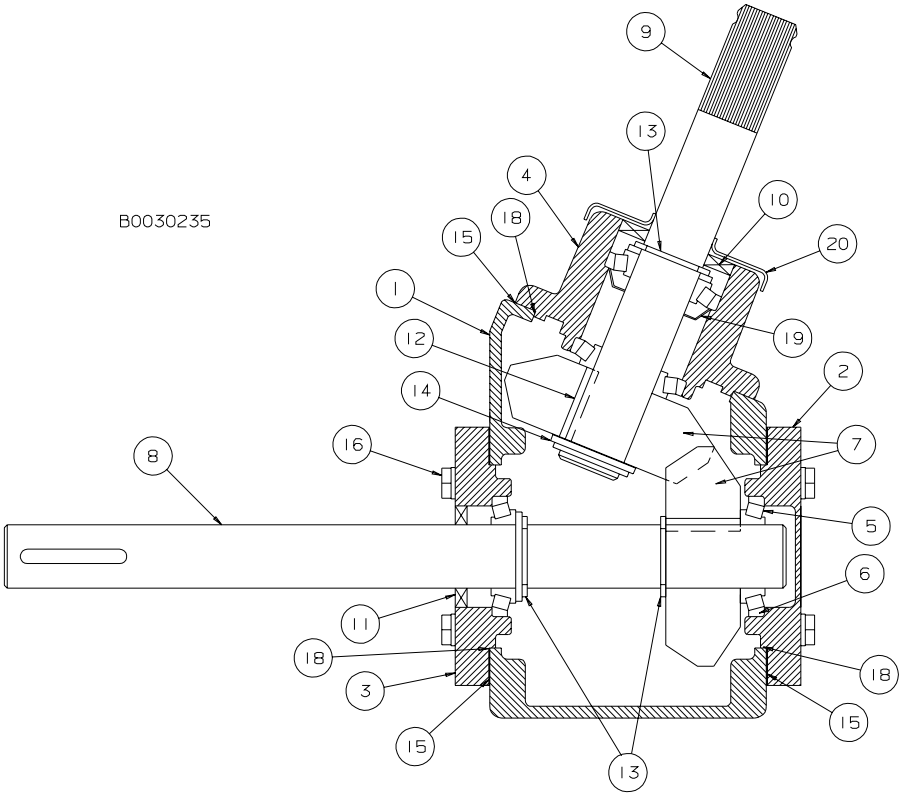

REF #	PART #	DESCRIPTION
1	B003023501	Case
2	B003023502	End Cap - no hole
3	B003023503	End Cap c/w hole
4	B003023504	Quill Housing
5	B003023505	Bearing Cone LM48548
6	B003023506	Bearing Cup LM48510
7	B003023507	Gear - 17 tooth
8	B003023508	Input Shaft
9	B003023509	Output Shaft - Splined
10	B003023510	Shaft Seal
11	B003023511	Shaft Seal
12	B003023512	Key - 5/16” x 1.61”
13	B003023513	Snap Ring
14	B003023514	Spacer
15	B003023515	Gasket
16	B003023516	Cap Screw - 3/8”x 1”
17	B003023517	9/16” Pipe Plug c/w O-Ring (not shown)
18	B003023518	O-Ring
19	B003023519	Grease Washer
20	B003023520	Debris Shield

HYDRAULIC SWING HOPPER WINCH ASSEMBLY - 13” HP MDSA AUGER
SERIAL NOS. 84000 - 87999

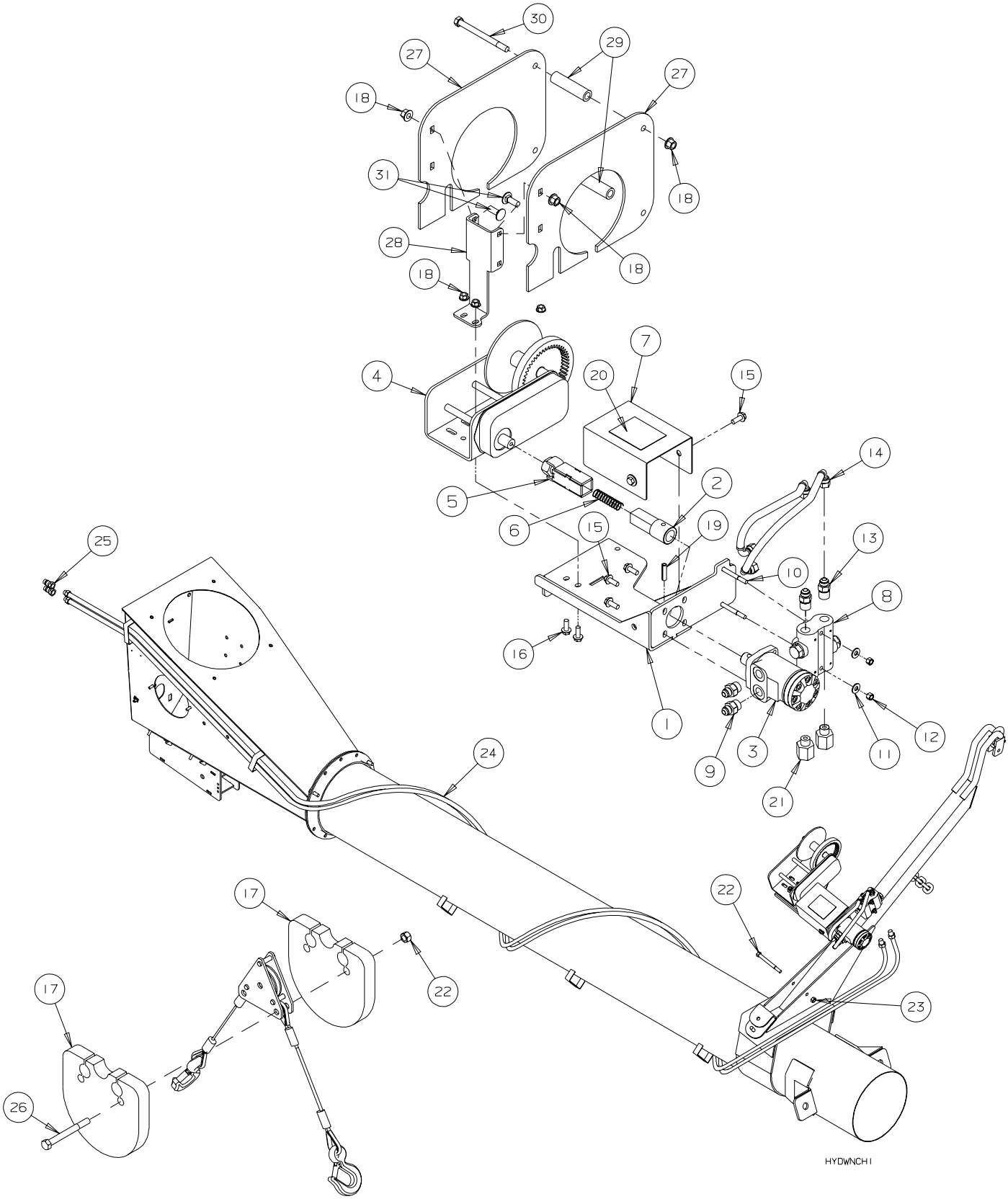

REF #	PART NO.	DESCRIPTION
1	C303914	Winch Mount
2	C303912	Hydraulic Motor Coupling
3	B019043	Hydraulic Motor - 5.9 cu in/rev
4	B030400	Dutton Lainson 2500 lbs Winch
5	C303970	Winch Coupler
6	B0210732	Compression Spring - 11/16” x 3” x 0.047” wire
7	C303971	Hydraulic Winch Guard
8	B0197495	Cushion Valve - #8 ORB ports
9	B019434	#10 MORB x #8 MJIC Adapter
10	B001017	5/16” x 3” Bolt
11	B001148	5/16” Flatwasher
12	B0011275	5/16” Lock Nut
13	B019440	#8 MORB x #8 MJIC Adapter
14	B019064	3/8” Hydra. Hose x 18” - #8 FJIC Elbow both ends
15	B001432	3/8” x 3/4” Serrated Flange Bolt
16	B001434	3/8” x 1 1/4” Serrated Flange Bolt
17	C308890	Weight Plate
18	B001405	3/8” Serrated Flange Nut
19	B0020612	3/8” x 1 1/2” Roll Pin
20	B029111	Moving Parts Hazard Decal
21	B019445	#8 MORB x 1/2” FPT Adapter
22	B001059	1/2” x 5” Bolt
23	B001134	1/2” Lock Nut
24	B019071	3/8” Hydra. Hose x 25’ - 1/2” MPT Elbow both ends
25	B019200	Pioneer Tip - 1/2” FPT
26	B001057	1/2”x 4 1/2” Bolt
27	C308135	Winch Side Plate
28	C308136	Winch Support Plate
29	C308137	Winch Spacer Plate
30	B001035	3/8”x 4” Bolt
31	B001083	3/8”x 1” Carriage Bolt

SIDE DRIVE OPTION - 13” HP MDSA AUGER
SERIAL NOS. 84000 - 87999

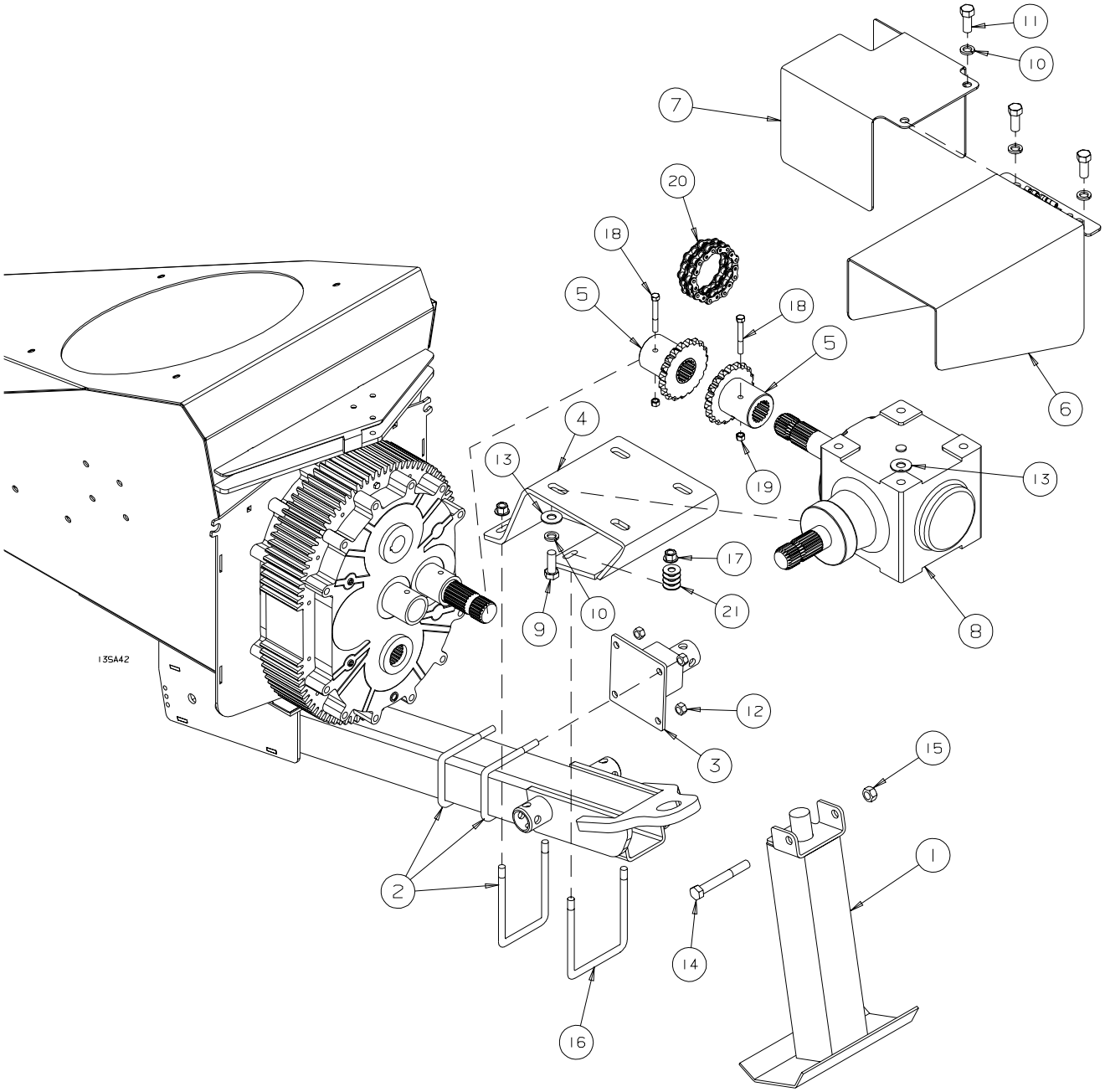

REF #	PART NO.	DESCRIPTION
1	C306935	Stand - Side Drive
2	B0020177	1/2” x 4 1/16” x 5” DEEP U-Bolt
3	C306066	Jack Mount
4	C307097	Gearbox Mount - 13” HP
5	C302916	Coupling - 80-17 Sprocket - 1 3/4” Spline
6	C302909	PTO Guard
7	C302908	Coupler Guard
8	B003025	Gearbox - Side Drive PTO
9	B001069	5/8” x 1 1/2” UNC Bolt - GR 5
10	B001169	5/8” Lockwasher
11	B0010679	5/8” x 1” UNC Bolt - GR 5
12	B001134	1/2” Stover Lock Nut
13	B0011535	5/8” SAE Flatwasher
14	B0010744	5/8” x 5” UNC Bolt - GR 5
15	B001139	5/8” Hex Nut
16	B0020174	1/2” x 5 1/16” x 5 1/4” DEEP U-Bolt
17	B001409	1/2” Serrated Flange Nut
18	B0010385	3/8” x 2 3/4” UNC Bolt - GR. 8
19	B0011325	3/8” Stover Lock Nut
20	B009331	80-2 x 17 Pitch Roller Chain c/w Offset & Connector Links
21	B001151	1/2” Flatwasher
NS	B003059	1390 Side Drive PTO Shaft
NS	B003058	1370 Side Drive PTO Shaft

WEASLER SERIES 44E
B003058 - 13” HP MDSA AUGER - SIDE DRIVE - 1 3/8” INPUT

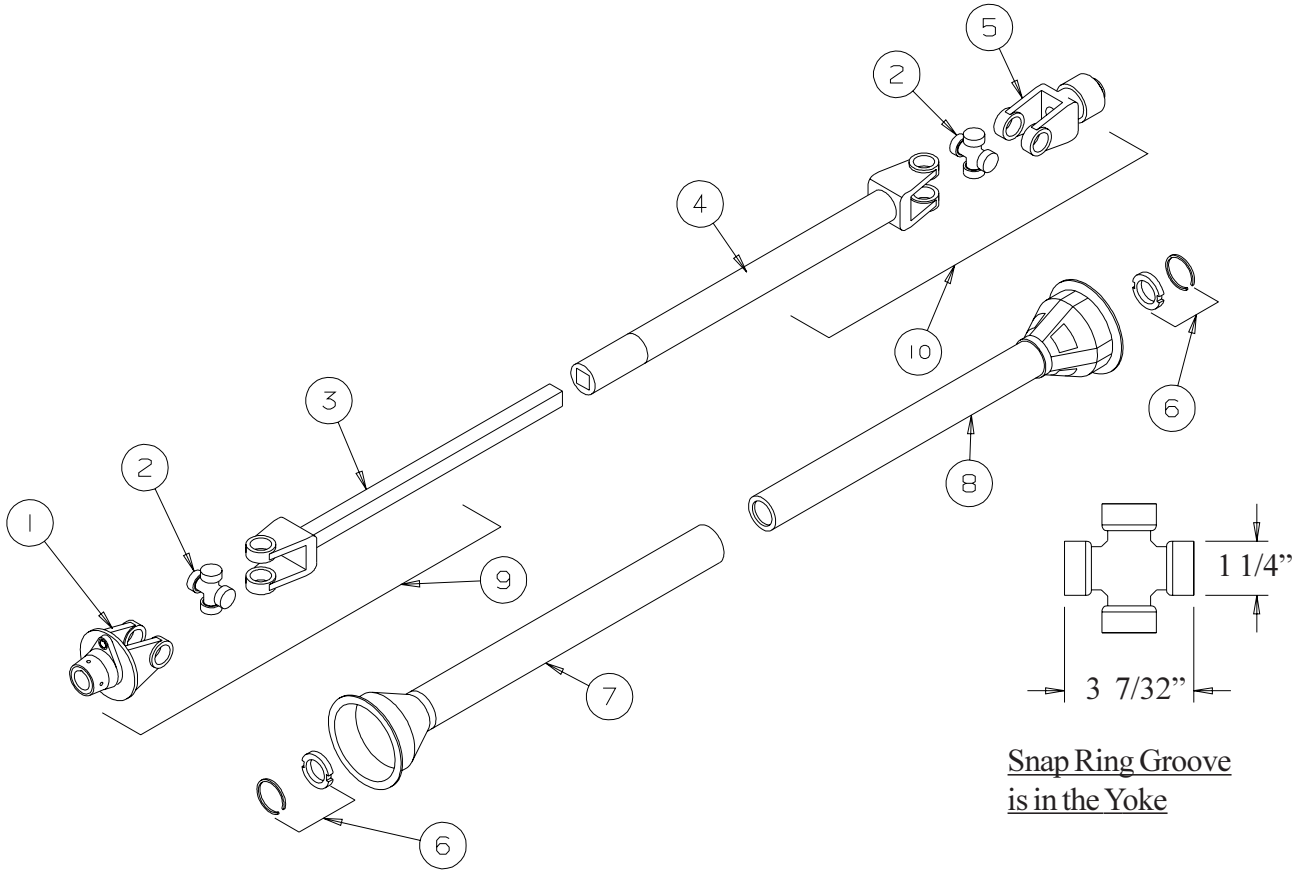

REF #	PART NO.	DESCRIPTION	QTY.
1	B003964	Shear Yoke - 21 Spline	1
2	B0037161	Cross & Bearing Kit	2
3	B0030583	Yoke & Shaft Ass’y	1
4	B0030584	Yoke & Tube Ass’y	1
5	B0038587	Yoke Assembly - 20 Spline	1
6	B003935	Shield Bearing	2
7	B0030585	Outer Shield	1
8	B0030586	Inner Shield	1
9	B0030581	Tractor Half of Shaft c/w Guard - 21 Spline	1
10	B0030582	Implement Half of Shaft c/w Guard - 20 Spline	1
NS	B001010	Shear Bolt - 5/16” x 1” Bolt Gr. 5	2
NS	B0011275	Shear Nut - 5/16” Stover Lock Nut	2

WEASLER SERIES 44E
B003059 - 13” HP MDSA AUGER - SIDE DRIVE - 1 3/4” INPUT

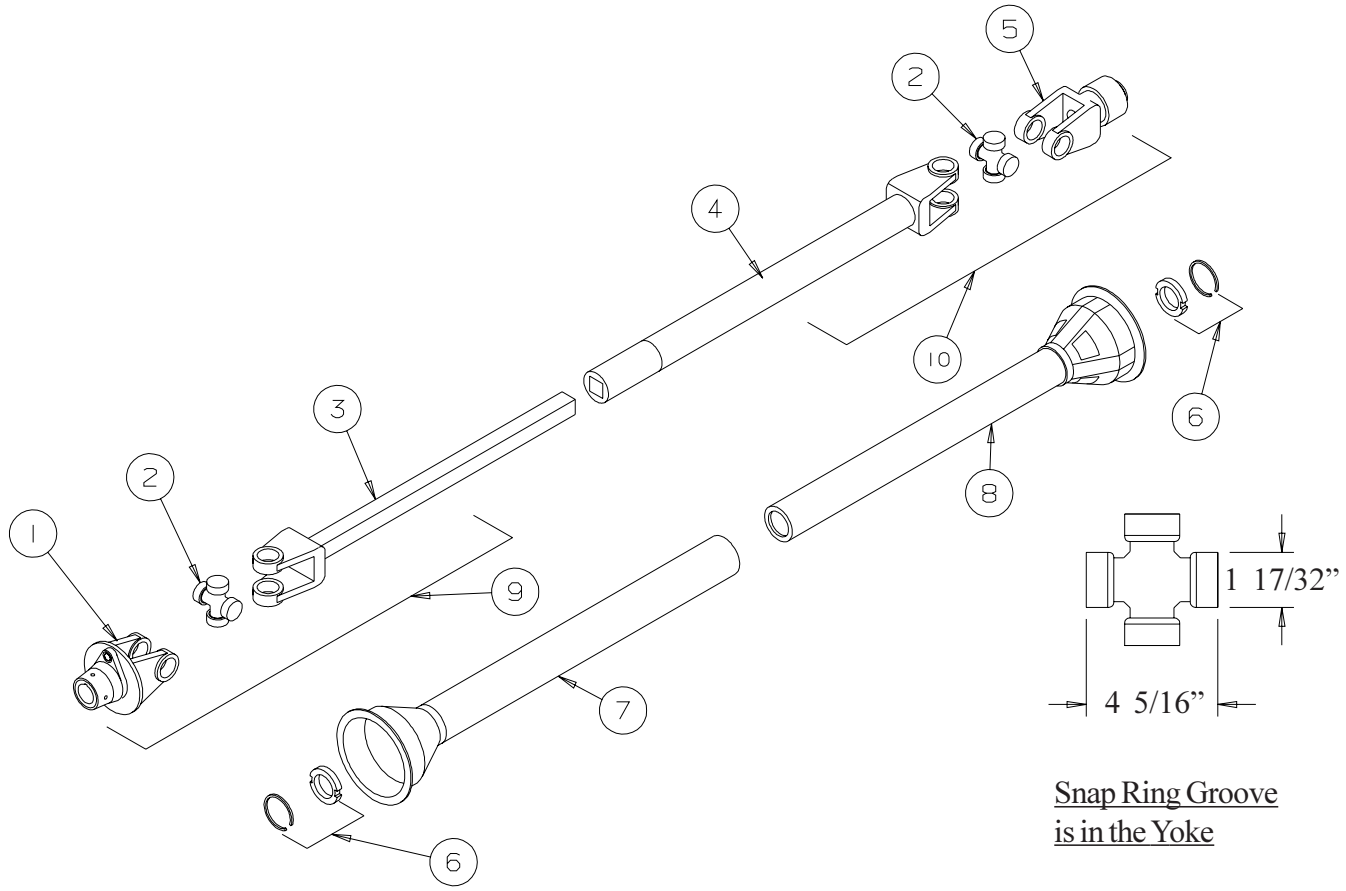

REF #	PART NO.	DESCRIPTION	QTY.
1	B003974	Shear Yoke - 20 Spline	1
2	B0037161	Cross & Bearing Kit	2
3	B0030593	Yoke & Shaft Ass’y	1
4	B0030584	Yoke & Tube Ass’y	1
5	B0038587	Yoke Assembly - 20 Spline	1
6	B003935	Shield Bearing	2
7	B0030595	Outer Shield	1
8	B0030586	Inner Shield	1
9	B0030591	Tractor Half of Shaft c/w Guard - 20 Spline	1
10	B0030582	Implement Half of Shaft c/w Guard - 20 Spline	1
NS	B001010	Shear Bolt - 5/16” x 1” Bolt Gr. 5	2
NS	B0011275	Shear Nut - 5/16” Stover Lock Nut	2